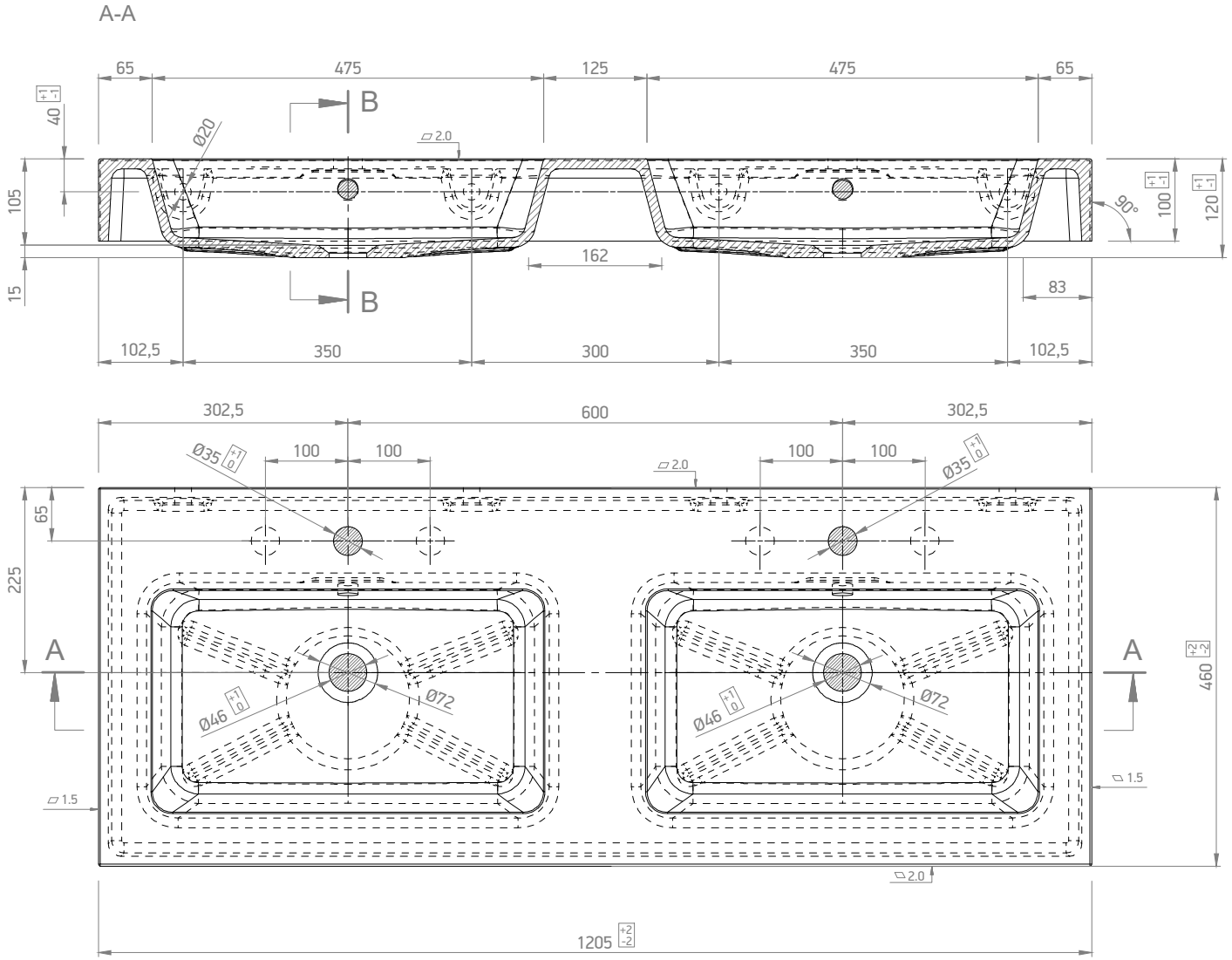

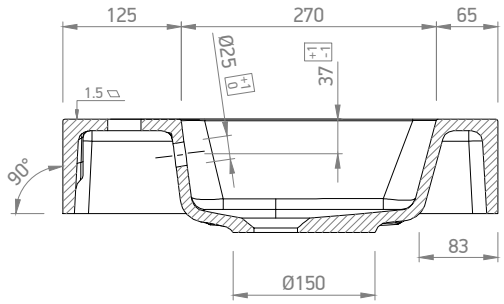

MARMY www.marmy.eu		Name: **BERGAMO MAX 120x46 D**
		Item NR.: 80 8139 12 42 10
Weight: 27,5 kg	Visible height: 10 cm	Scale: 1:8