A-A

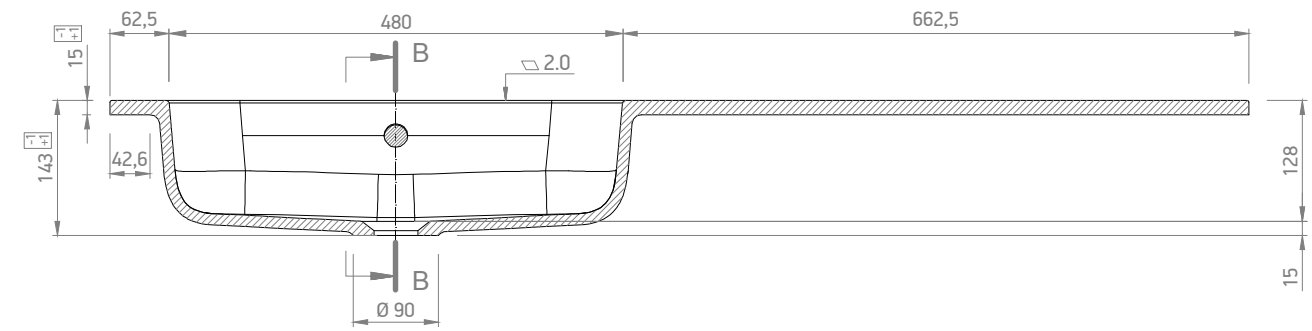

B-B

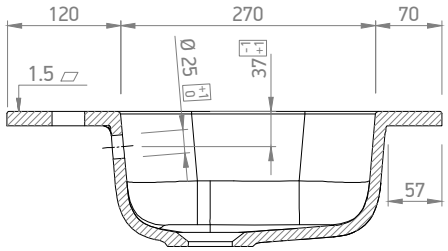

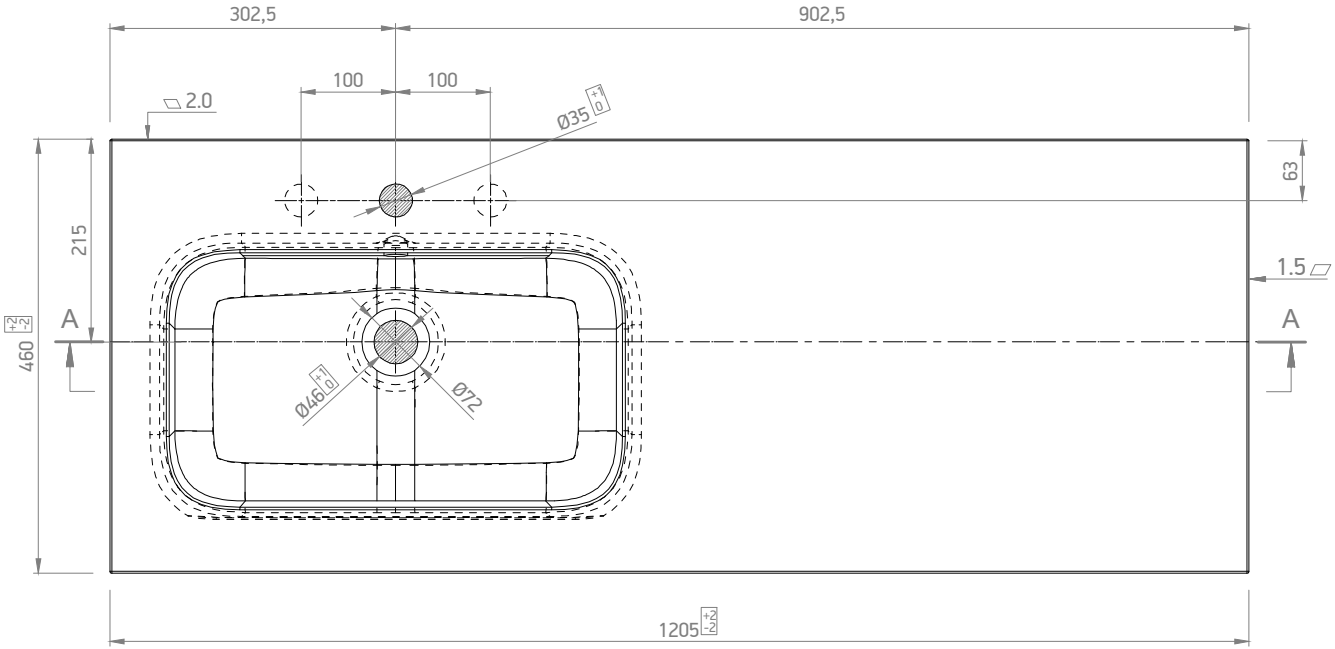

MARMY	www.marmy.eu	Name: **CALVIN 120x46 LEFT**
		Item NR.: 80 7285 12 31 10
Weight: 18 kg	Visible height: 1,5 cm	Scale: 1:8