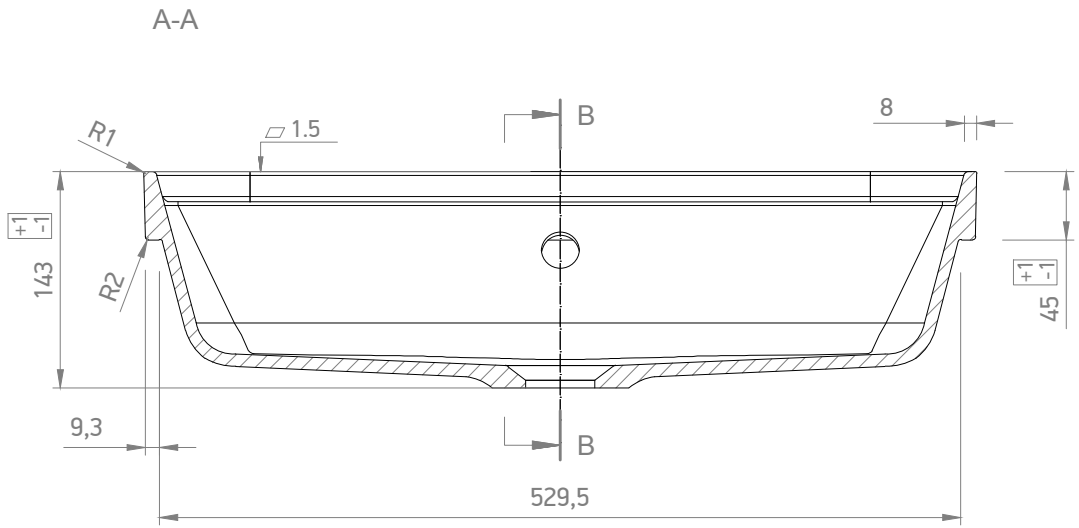

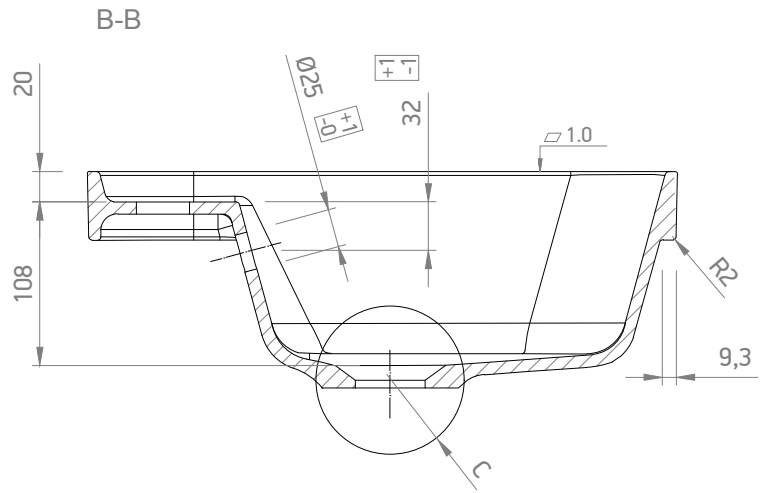

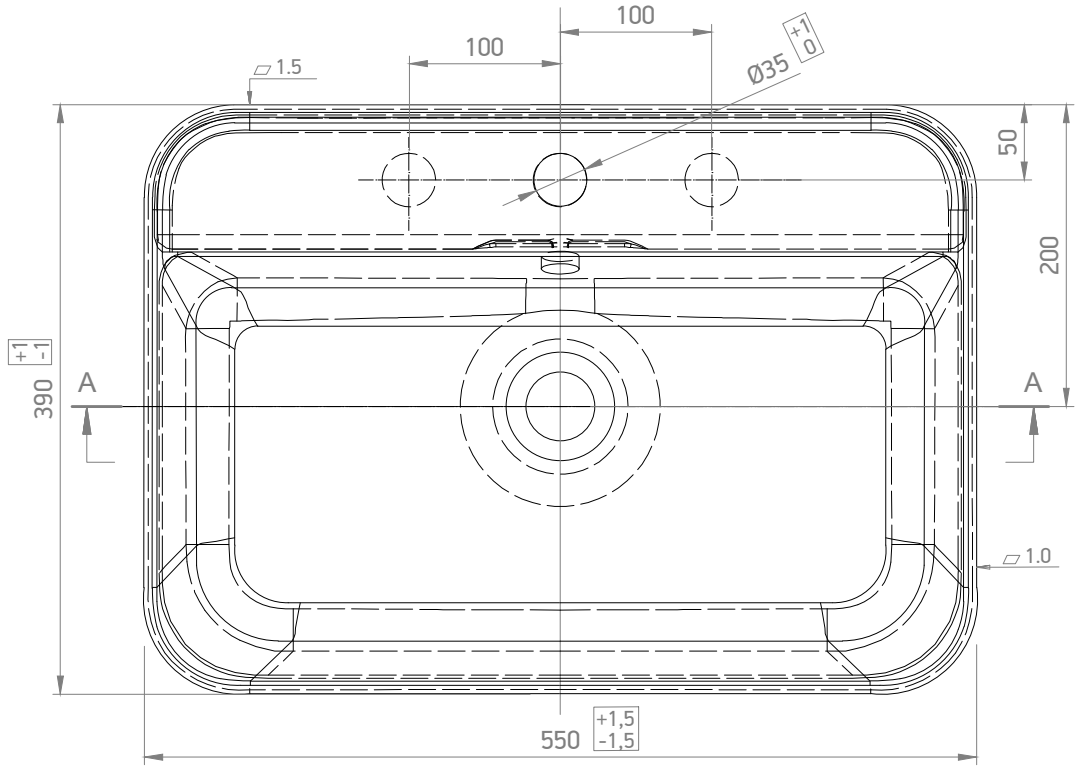

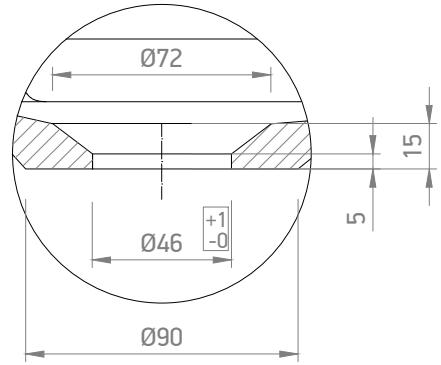

MARMY www.marmy.eu		Name: **LUXE 55x39**
		Item NR.: **80 7795 06 11 10**
Weight: 6 kg	Visible height: 4,5 cm	Scale: 1:5